CHAPTER 138, ARTICLE III GENERAL PROVISIONS DIVISION 1.
SECTION 138-60 SWIMMING POOLS

Definitions: Accessory building and structures shall be classified as herein defined and, unless otherwise provided in this Chapter, shall be subject to the following regulations.

a. By their definition and nature, accessory buildings and structures shall be secondary and clearly incidental to the principal building on a parcel of land. Such building or structures shall therefore not be permitted as the only building or structure on a parcel of land.

Swimming Pools: For private residential use only, means a swimming pool and the apparatus and equipment pertaining to the swimming pool maintained by an individual for the sole use of is household and quests without charge for admission and not for the purpose of profit or in connection with any business operated for profit, located on a lot as an accessory use to a residence. This includes hot tubs and Jacuzzi's as installed outside and accessory to the main residence.

A wall of a swimming pool shall not be located less than 6 feet from any rear or side property line. Swimming pools shall be erected in the rear yard.

A wall of a swimming pool that has a capacity greater than 600 gallons shall not be located less than 6 feet from the main building or other accessory building or structure. Swimming pools that have a capacity of 600 or fewer gallons may be excepted from this setback requirement.

Construction shall require a site plan, building permit, and all applicable electrical heating and plumbing permits. All pools, which contain 24 inches (610 mm) or more of water in depth at any point, shall have erected an adequate enclosure in accordance with the city's current building codes. Electrical service conductors and other overhead wires shall be located a minimum of 10 feet from the pool's edge or a minimum of 22 feet above the pool surface. A ground fault interrupter shall be required for the circuit from the electrical panel to the receptacle for filtration. Pool heaters shall be installed according to the current adopted city code. All swimming pools shall be provided with a recirculating skimming device. The water of all swimming pools shall be sanitized.

Zoning Board of Appeals: When a detached accessory building or structure other than as defined in Chapter 138, construction or placement of the accessory building or structure shall be subject to the approval of the Zoning Board of Appeals.

REQUIREMENTS FOR PERMANENT SWIMMING POOLS - BASED ON THE 2015 MICHIGAN RESIDENTIAL CODE

Bond All Metal Parts that are within 5 Feet of the Pool

All pools that are

- constructed in the ground or
- constructed partially in the ground
- capable of holding water in a depth greater than 42 inches
- installed inside a building, regardless of water depth
- served by electrical circuits or otherwise

SHALL BE BONDED

Do not bond double insulated pool motors or pumps which are double insulated and have a nonmetallic cover.

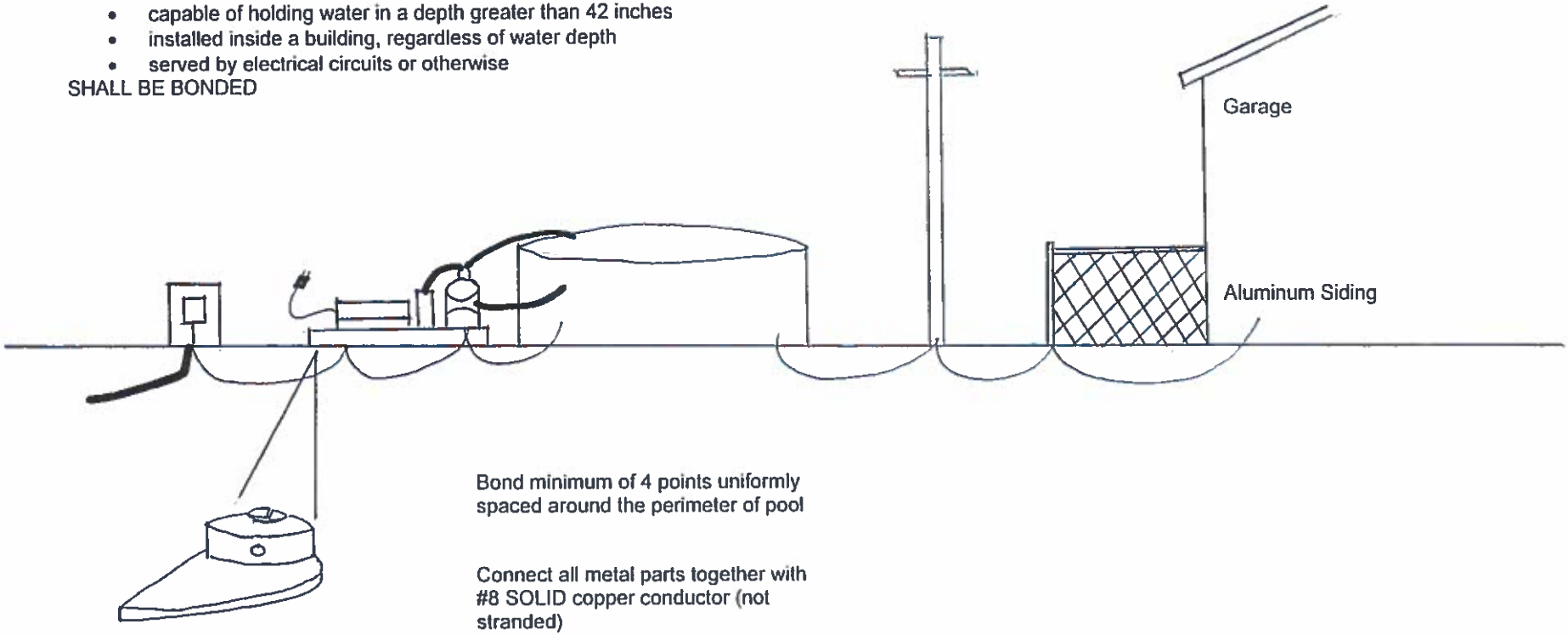

Bond minimum of 4 points uniformly spaced around the perimeter of pool

Connect all metal parts together with #8 SOLID copper conductor (not stranded)

Use stainless steel, brass, copper, or copper alloy, lugs and hardware

Bond to structural reinforcing steel. The steel must be continuous around the pool by welding or bolting. If not continuous, bond to each metallic section.

REQUIREMENTS FOR PERMANENT SWIMMING POOLS - BASED ON THE 2015 MICHIGAN RESIDENTIAL CODE

Underground and Overhead Conductors Clearances must comply with the 2015 MRC – Chapter 42

EMT Conduit allowed on buildings and conduit or optional wiring types allowed inside buildings

NOTE: Most existing garage wiring is not acceptable for pool wiring

Overhead conductors shall be 10 feet from inside wall of pool horizontal 22.5 feet above water level in any direction if drop passes over pool

A receptacle outlet which is GFCI protected and part of a general purpose circuit shall be installed at least 6 feet and not more than 20 feet from the pool

Weatherproof Splice Box

Minimum 10 feet and Maximum 20 feet from pool

Minimum 6 foot from pool – 10 feet maximum

20 AMP A/C Only Switch with Weatherproof In-use Cover

#12 Copper Three Wire Cord Type SJ, SJE, SJO, SO, etc. ..

NOT OVER 3 FEET LONG
TWIST LOCK TYPE

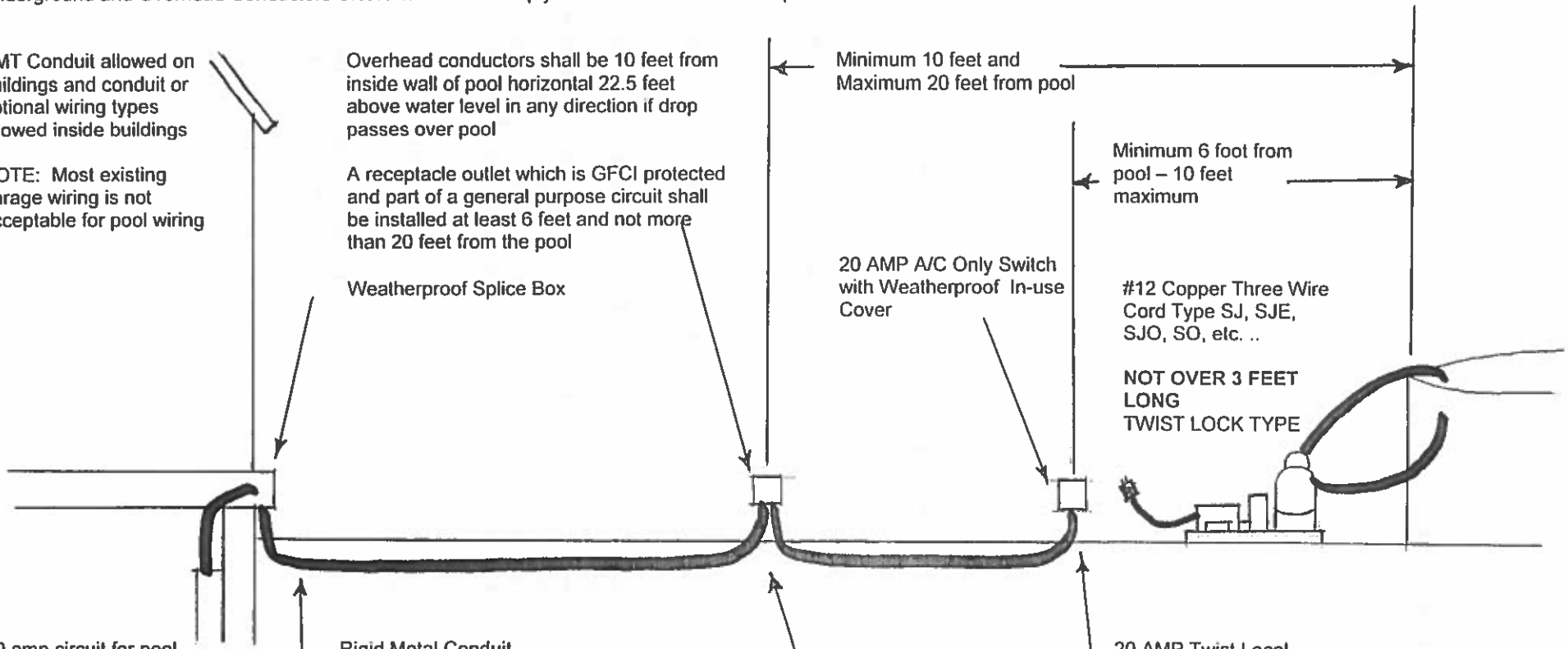

20 amp circuit for pool motor GFCI protected 15 or 20 amp general purpose circuit for other outlet GFCI protected.

All underground wiring except pool associated wiring shall be 5 feet from pool

Rigid Metal Conduit
Intermediate Metal Conduit
Electrical PVC Conduit
Under Driveways Conduit
DO NOT USE THINWALL TYPE EMT CONDUIT

#12 Three Wire Cord Type: TW, THW, THWN or XHHW
One Green, One White, One Black Individual Wires in Conduit.
DO NOT USE MULTICONDUCTOR CABLES
Ground must be #12 insulated copper conductor

Secure boxes to a substantial structure OR use 2 rigid or intermediate metal conduits

Tamper and weather resistant receptacles

U. L. listed swimming pool pump motor for permanent pools.

DO NOT USE A MOTOR LISTED FOR STORABLE POOLS

20 AMP Twist Local Receptacle and Cap GFCI Protected with Cover which is raintight while in use

REQUIREMENTS FOR STORABLE SWIMMING POOLS

A storable swimming pool is a pool that is constructed on or above the ground and is capable of holding water to a maximum depth of 42 inches or a pool with nonmetallic, molded polymeric walls or inflatable fabric walls regardless of dimension.

BASED ON THE 2015 MICHIGAN RESIDENTIAL CODE

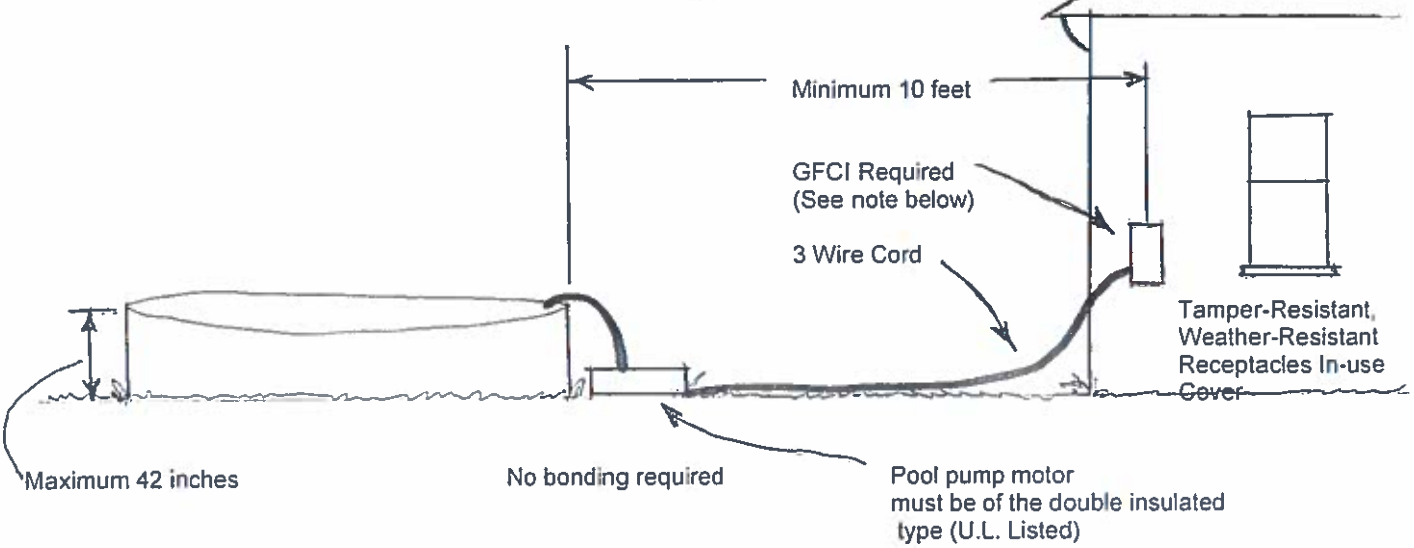

The type of pump suitable for use with storable pools has a 25 foot flexible cord and attachment plug. It is marked as follows:

> "This pump is for use with Storable Pools Only. – DO NOT USE with Permanently Installed Pools. A storable pool is constructed so that it may be readily disassembled for storage and reassembled to its original integrity. A permanently installed pool is constructed in or on the ground or in a building such that it cannot be readily disassembled for storage." Cords may NOT be shortened nor shall attachment caps be changed to a different type. If a listed double insulated pump motor comes with a shorter cord, the assembly must be located so that the cord will reach an electrical outlet at least 10 feet away from the pool.

LISTING MARK. The UL Listing Mark for these products accompanies the product name "Underwater Lighting Fixture for Above Ground Storable Swimming Pool."

DOUBLE INSULATION. Pumps with a minimum 25 foot supply cord are double insulated and have inaccessible metal parts grounded with the equipment grounding conductor terminated at the attachment plug. These pumps do not have a bonding connector.

GFCI. These units are intended for connection to circuits protected by ground fault circuit interrupts and are marked, "WARNING -- Risk of electric shock. Connect only to a grounding type receptacle protected by a ground fault circuit interrupter(GFCI)."

Outlet will require a Raintite While In Use Cover. Distance from pool to receptacle shall be at least 10 feet.

International Building Code or the *International Residential Code* shall comply with Section 304.2.1 or 304.2.2.

Exception: *Aquatic vessels* located in riverine flood hazard areas that are outside of designated floodways and *aquatic vessels* located in flood hazrd areas where the source of flooding is tides, storm surges or coastal storms.

304.2.1 Aquatic vessels located in designated floodways. Where *aquatic vessels* are located in designated floodways, documentation shall be submitted to the *code official* that demonstrates that the construction of the aquatic vessel will not increase the design flood elevation at any point within the jurisdiction.

304.2.2 Aquatic vessels located where floodways have not been designated. Where *aquatic vessels* are located where design flood elevations are specified but floodways have not been designated, the applicant shall provide a floodway analysis that demonstrates that the proposed *aquatic vessel* and any associated grading and filling, will not increase the design flood elevation more than 1 foot (305 mm) at any point within the jurisdiction.

304.3 Aquatic vessels in flood hazard areas subject to high-velocity wave action. *Aquatic vessels* installed in flood hazard areas subject to high-velocity wave action (coastal high hazard areas) shall be designed and constructed in accordance with ASCE 24.

304.4 Protection of equipment. Equipment shall be elevated to or above the design flood elevation or be anchored to prevent flotation and protected to prevent water from entering or accumulating within the components during conditions of flooding.

304.5 GFCI protection. Electrical equipment installed below the design flood elevation shall be supplied by branch circuits that have ground-fault circuit interrupter protection for personnel.

SECTION 305
BARRIER REQUIREMENTS

305.1 General. The provisions of this section shall apply to the design of *barriers* for *aquatic vessels*. These design controls are intended to provide protection against the potential drowning and near drowning by restricting access to such vessels. These requirements provide an integrated level of protection against potential drowning through the use of physical barriers and warning devices.

Exceptions:

1. *Spas* and hot tubs with a lockable safety cover that complies with ASTM F 1346.
2. Swimming pools with a *powered safety cover* that complies with ASTM F 1346.

305.2 Outdoor swimming pools and spas. All outdoor *aquatic vessels* and indoor swimming pools shall be surrounded by a *barrier* that complies with Sections 305.2.1 through 305.7.

305.2.1 Barrier height and clearances. Barrier heights and clearances shall be in accordance with all of the following:

1. The top of the *barrier* shall be not less than 48 inches (1219 mm) above grade where measured on the side of the *barrier* that faces away from the *aquatic vessel*. Such height shall exist around the entire perimeter of the vessel and for a distance of 3 feet (914 mm) where measured horizontally from the required *barrier*.
2. The vertical clearance between grade and the bottom of the *barrier* shall not exceed 2 inches (51 mm) for grade surfaces that are not solid, such as grass or gravel, where measured on the side of the barrier that faces away from the vessel.
3. The vertical clearance between a surface below the barrier to a solid surface, such as concrete, and the bottom of the required *barrier* shall not exceed 4 inches (102 mm) where measured on the side of the required barrier that faces away from the vessel.
4. Where the top of the vessel structure is above grade, the *barrier* shall be installed on grade or shall be mounted on top of the vessel structure. Where the *barrier* is mounted on the top of the vessel, the vertical clearance between the top of the vessel and the bottom of the *barrier* shall not exceed 4 inches (102 mm).

305.2.2 Openings. Openings in the *barrier* shall not allow passage of a 4 inch (102 mm) diameter sphere.

305.2.3 Solid barrier surfaces. Solid *barriers* that do not have openings shall not contain indentations or protrusions that form handholds and footholds, except for normal construction tolerances and tooled masonry joints.

305.2.4 Mesh restraining barrier/fence. Mesh fences, other than chain link fences in accordance with Section 305.2.7, shall be installed in accordance with the manufacturer's instructions and shall comply with the following:

1. The bottom of the mesh restraining fence shall be not more than 1 inch (25 mm) above the deck or installed surface or grade.
2. The maximum vertical clearance from the bottom of the mesh fence and the solid surface shall not permit the fence to be lifted more than 4 inches (102 mm) from grade or decking.
3. The fence shall be designed and constructed so that it does not allow passage of a 4-inch (102 mm) sphere under any mesh panel. The maximum vertical clearance from the bottom of the mesh fence and the solid surface shall not be more than 4 inches (102 mm) from grade or decking.
4. An attachment device shall attach each barrier section at a height not lower than 45 inches (1143 mm) above grade. Common attachment devices include, but are not limited to, devices that provide the secu-

rity equal to or greater than that of a hook-and-eye-type latch incorporating a spring-actuated retaining lever such as a safety gate hook.

5. Where a hinged gate is used with a mesh *barrier*, the gate shall comply with Section 305.3.
6. Patio deck sleeves such as vertical post receptacles which are placed inside the patio surface shall be of a nonconductive material.
7. Mesh fences shall not be used on top of on ground *residential pools*.

305.2.5 Closely spaced horizontal members. Where the *barrier* is composed of horizontal and vertical members and the distance between the tops of the horizontal members is less than 45 inches (1143 mm), the horizontal members shall be located on the *aquatic vessel* side of the fence. Spacing between vertical members shall not exceed 1.75 inches (44 mm) in width. Where there are decorative cutouts within vertical members, spacing within the cutouts shall not exceed 1.75 inches (44 mm) in width.

305.2.6 Widely spaced horizontal members. Where the *barrier* is composed of horizontal and vertical members and the distance between the tops of the horizontal members is 45 inches (1143 mm) or more, spacing between vertical members shall not exceed 4 inches (102 mm). Where there are decorative cutouts within vertical members, spacing within the cutouts shall not exceed 1.75 inches (44 mm) in width.

305.2.7 Chain link dimensions. The maximum opening formed by a chain link fence shall be not more than 1.75 inches (44 mm). Where the fence is provided with slats fastened at the top and bottom which reduces the openings, such openings shall be not more than 1.75 inches (44 mm).

305.2.8 Diagonal members. Where the *barrier* is composed of diagonal members, the maximum opening formed by the diagonal members shall be not more than 1.75 inches (44 mm). The angle of diagonal members shall not be greater than 45 degrees (0.79 rad) from vertical.

305.2.9 Clear zone. There shall be a clear zone of not less than 36 inches (914 mm) around the exterior of the *barrier* and around any permanent structures or equipment such as pumps, *filters* and heaters that can be used to climb the barrier.

305.2.10 Poolside barrier setbacks. The *aquatic vessel* side of the required *barrier* shall be not less than 20 inches (508 mm) from the water's edge.

305.3 Gates. Access gates shall comply with the requirements of Sections 305.3.1 through 305.3.3 and shall be equipped to accommodate a locking device. Pedestrian access gates shall open outward away from the vessel and shall be self-closing and have a self-latching device.

305.3.1 Utility or service gates. Gates not intended for pedestrian use, such as utility or service gates, shall remain locked when not in use.

305.3.2 Double or multiple gates. Double gates or multiple gates shall have at least one leaf secured in place and the adjacent leaf shall be secured with a self-latching device. The gate and *barrier* shall not have openings larger than $^1/_2$ inch (12.7 mm) within 18 inches (457 mm) of the latch release mechanism. The self-latching device shall comply with the requirements of Section 305.3.3.

305.3.3 Latches. Where the release mechanism of the self-latching device is located less than 54 inches (1372 mm) from grade, the release mechanism shall be located on the vessel side of the gate at least 3 inches (76 mm) below the top of the gate, and the gate and *barrier* shall not have openings greater than $^1/_2$ inch (12.7 mm) within 18 inches (457 mm) of the release mechanism.

305.4 Structure wall as a barrier. Where a wall of a dwelling or structure serves as part of the *barrier*, doors and operable windows with a sill height of less than 48 inches (1219 mm) that provide direct access to the *aquatic vessel* through the wall, shall be equipped with one or more of the following:

1. An alarm that produces an audible warning when the door or its screen or window, is opened. The alarm shall be *listed* and *labeled* as a water hazard entrance alarm in accordance with UL 2017. In dwellings or structures not required to be Accessible units, Type A units or Type B units, the deactivation switch shall be located 54 inches (1372 mm) or more above the threshold of the door. In dwellings or structures required to be Accessible units, Type A units or Type B units, the deactivation switch shall be located not greater than 54 inches (1372 mm) and not less than 48 inches (1219 mm) above the threshold of the door.
2. A safety cover that is *listed* and *labeled* in accordance with ASTM F 1346.
3. An *approved* means of protection, such as self-closing doors with self-latching devices, provided that the degree of protection afforded is not less than the protection afforded by Items 1 or 2.

305.5 Pool structure as a barrier. Where an onground *residential pool* structure is used as a *barrier* or where the *barrier* is mounted on top of the pool structure, the following shall apply:

1. An onground pool wall, itself, shall be permitted to be the *barrier* where the pool structure is on grade and the wall is at least 48 inches (1219 mm) above grade for the entire perimeter of the pool and complies with the requirements of Section 305.2.
2. Where the means of access is a *ladder* or steps, the *ladder* or steps shall be capable of being secured, locked or removed to prevent access or the ladder or steps shall be surrounded by a *barrier* that meets the requirements of this section.
3. When the *ladder* or steps are secured, locked or removed, any opening created shall not allow the passage of a 4 inch (102 mm) diameter sphere.
4. The *barrier* shall be installed in accordance with the manufacturer's instructions.

305.6 Natural barriers. In the case where the vessel area abuts the edge of a lake or other natural body of water, public